PIV MEDIA ISOLATION VALVES

Standard Mount PEEK Material (Metric)

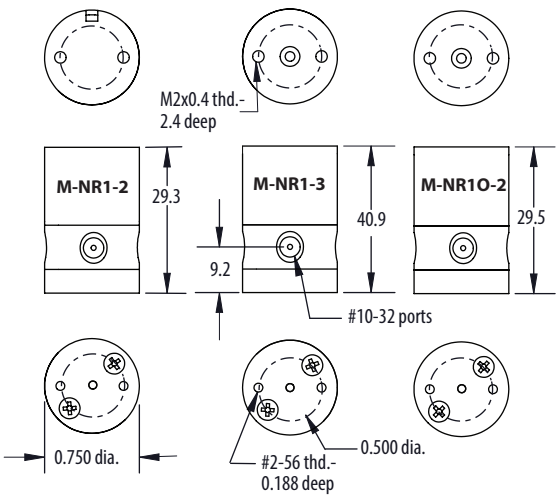

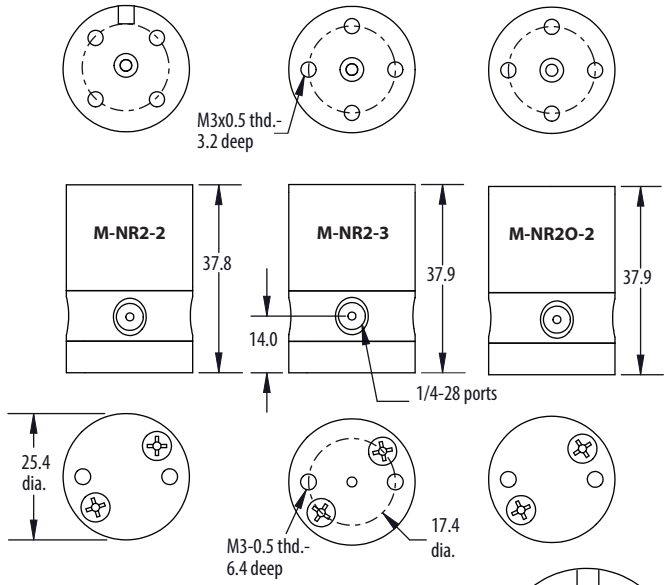

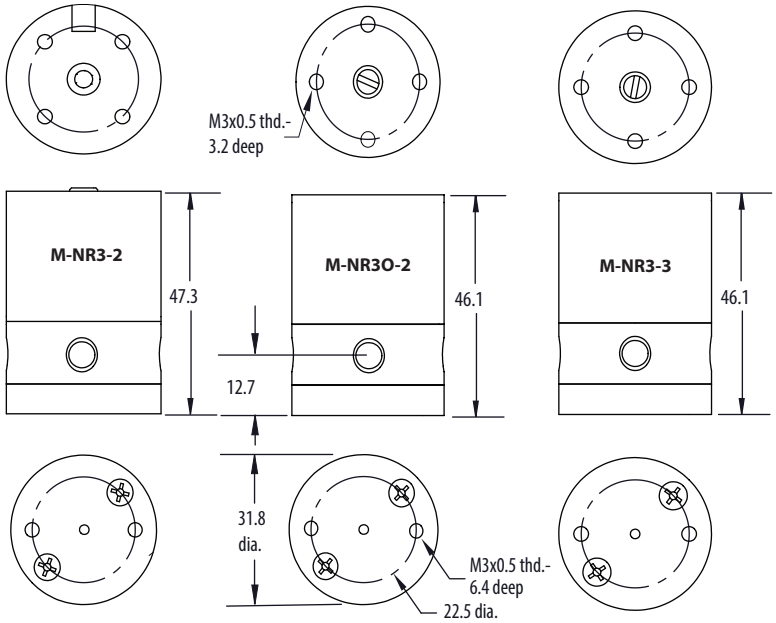

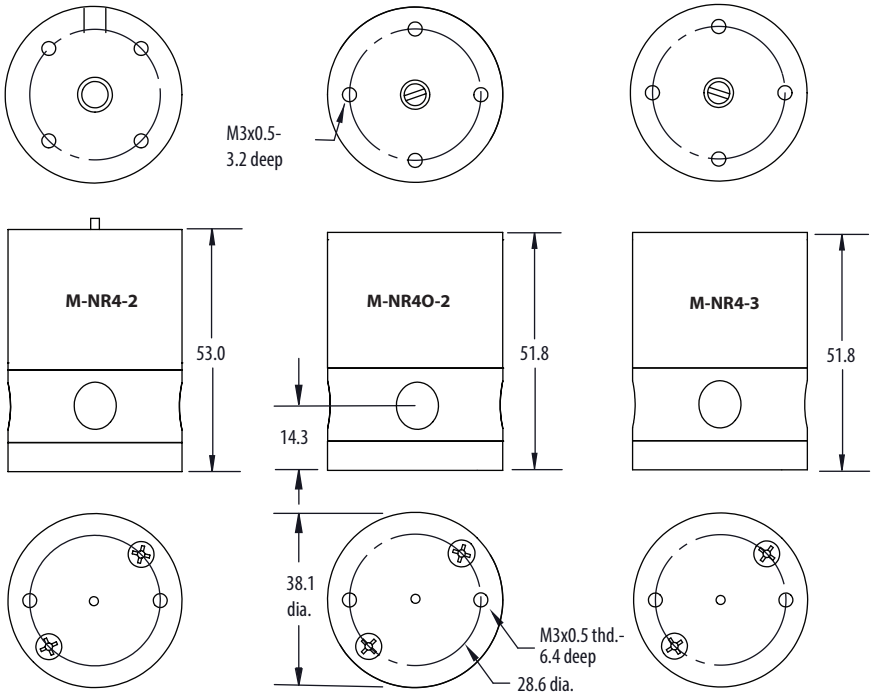

Clippard

877-245-6247 | clippard